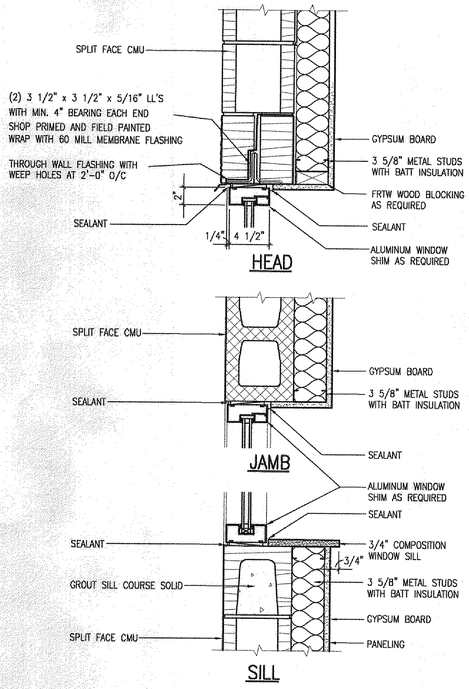

6 A202 WINDOW DETAIL
1 1/2" = 1'-0"

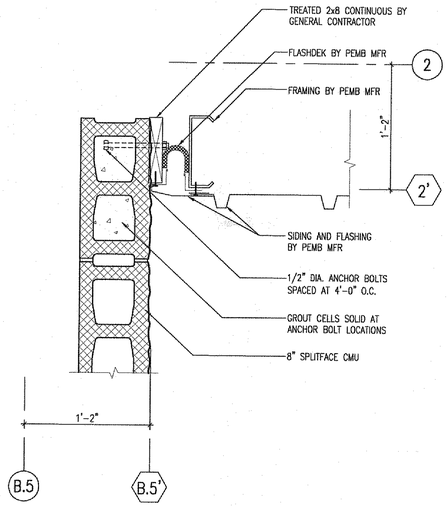

4 A202 FLASHING PLAN DETAIL
1 1/2" = 1'-0"

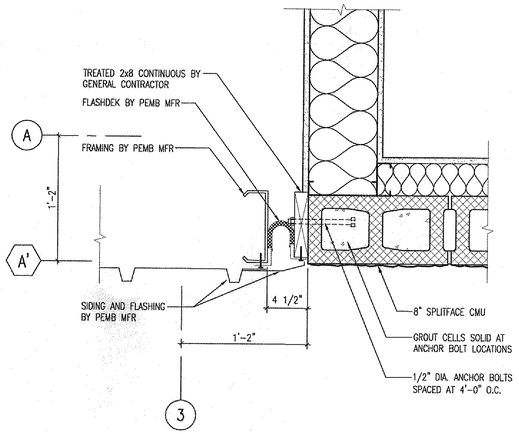

1 A202 FLASHING PLAN DETAIL
1 1/2" = 1'-0"

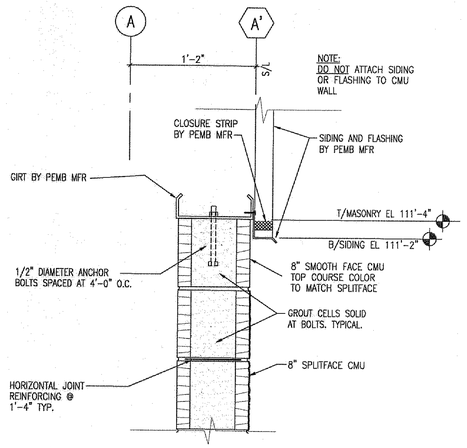

2 A202 FLASHING DETAIL
1 1/2" = 1'-0"

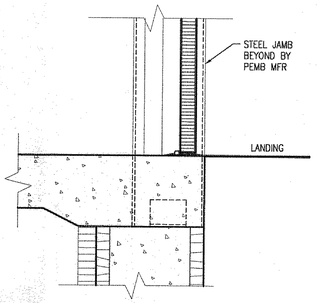

7 A202 SILL DETAIL
1 1/2" = 1'-0"

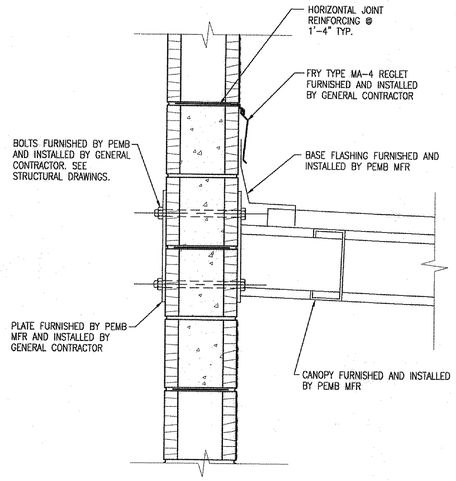

5 A202 OFFICE CANOPY FLASHING DETAIL
1 1/2" = 1'-0"

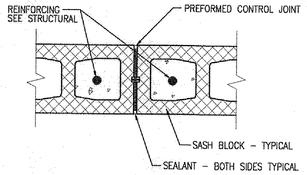

3 A202 TYPICAL CONTROL JOINT DETAIL
1 1/2" = 1'-0"

REVISIONS

JOB NO. 40539
DATE 12/11/07
DRAWN BY JF
CHECKED BY SC

FedEx Ground
FACILITIES & MATERIAL HANDLING SYSTEMS
1000 FEDEX DRIVE
MOON TOWNSHIP, PA 15108
412/298-1000
FedEx Home Delivery Co-Location

GBC DESIGN, INC.
3878 W. Market St. Akron, OH 44333-3806
Phone 330-836-0228 Fax 330-836-5762

SAAD DEVELOPMENT CORPORATION
3601 SPRING HILL BUSINESS PARK, SUITE 200
MOBILE, AL 36608
PHONE: 251-478-7223

COPYRIGHT © 2007 SAAD DEVELOPMENT CORPORATION
THE REPRODUCTION, ALTERATION OR USE OF GENERAL DESIGNS OR IDEAS IS FORBIDDEN WITHOUT THE WRITTEN PERMISSION OF SAAD DEVELOPMENT CORPORATION.

FEDEX GROUND DOTHAN
PACKAGE DISTRIBUTION CENTER
4874 WESTGATE PARKWAY
DOTHAN, AL 36303

ALTERNATE DETAILS

SHEET NO.
A203
OF