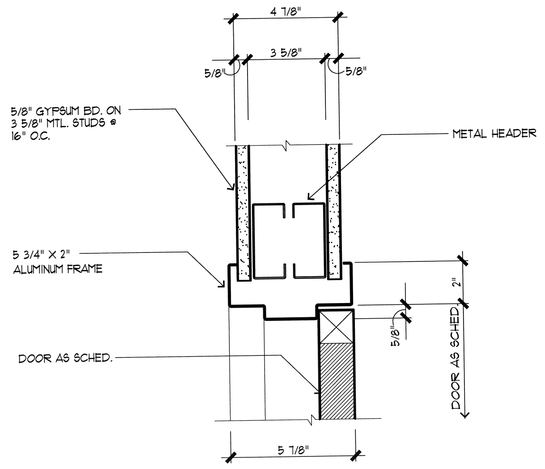

1 DOOR HEAD DETAL
SCALE: 3"=1'-0"

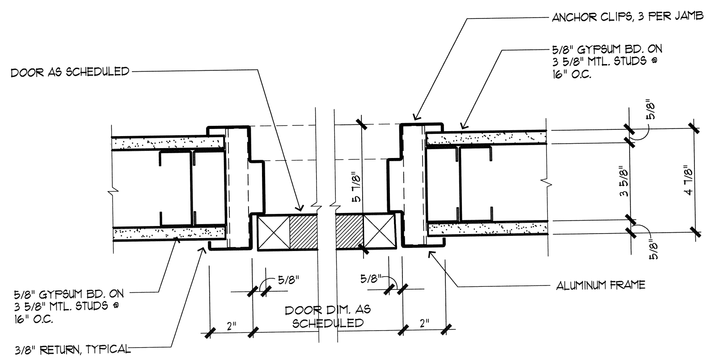

2 DOOR JAMB DETAIL
SCALE: 3"=1'-0"

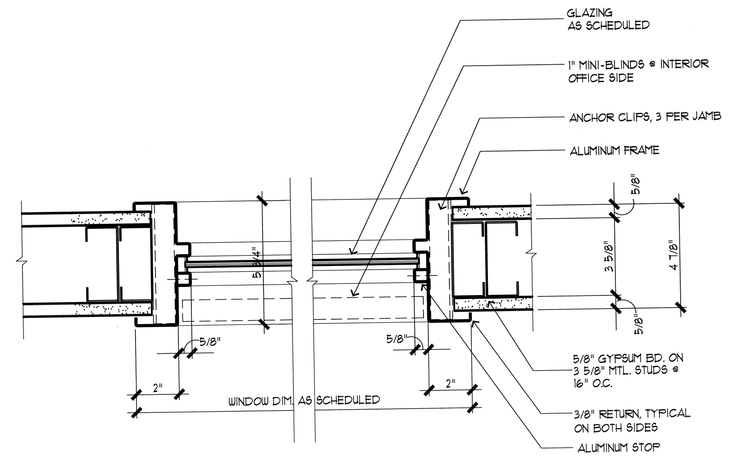

3 DOOR / SIDELITE JAMB DETAIL
SCALE: 3"=1'-0"

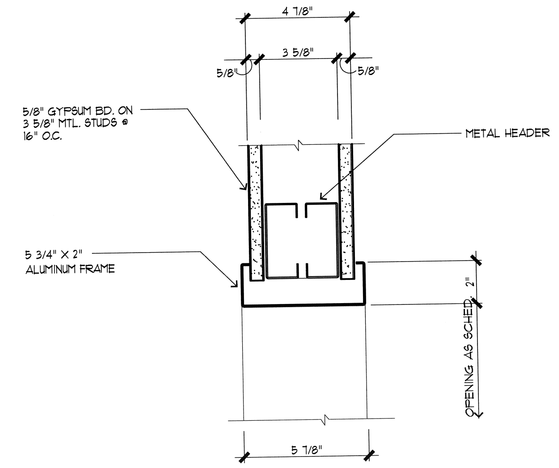

4 CASE HEAD/ JAMB DETAIL
SCALE: 3"=1'-0"

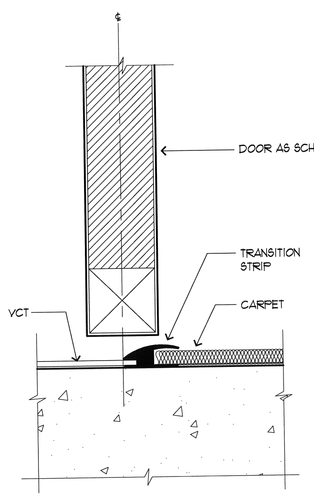

10 SILL DETAIL
HALF FULL SCALE

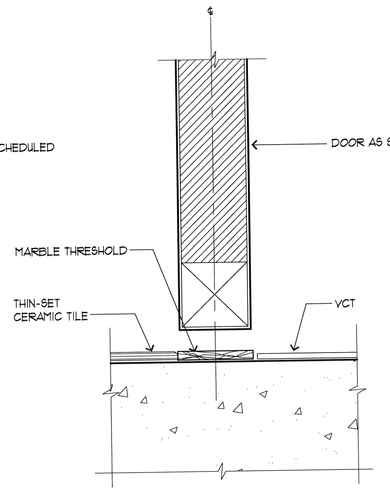

11 SILL DETAIL
HALF FULL SCALE

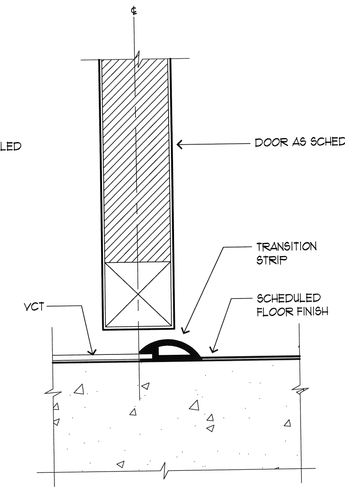

12 SILL DETAIL
HALF FULL SCALE

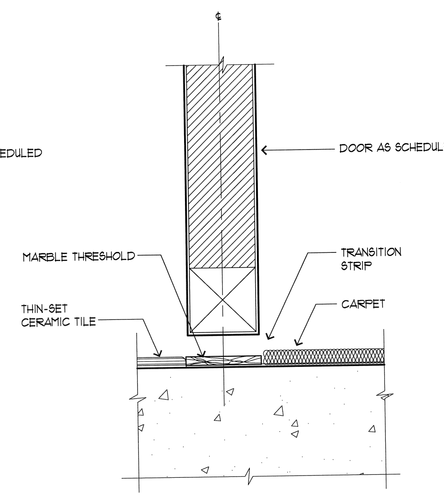

13 SILL DETAIL
HALF FULL SCALE

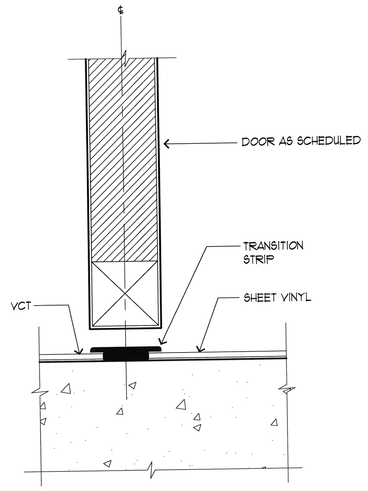

14 SILL DETAIL
HALF FULL SCALE

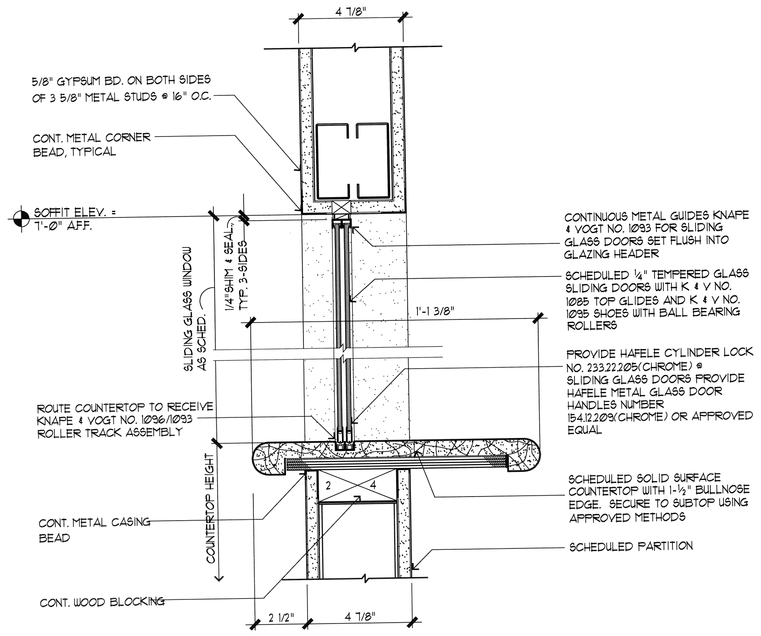

15 PASS-THRU WINDOW DETAIL
SCALE: 3"=1'-0"

Project Architect

SGI
SIKES GROUP, INC.
ARCHITECTS + PROJECT CONSULTANTS
12012 WICKCHESTER, SUITE 650 TEL: 281.759.7400
HOUSTON, TEXAS 77079 FAX: 281.759.7416
WWW.SIKESGROUP.COM

Sheet Number	Issuance / Revision: Date	Description
	08/23/07	ISSUED FOR DHH REVIEW AND APPROVAL
	09/14/07	ISSUED FOR PERMIT AND PRICING

Project
DaVita
FLEUR DE LIS CLINIC
5555 BULLARD AVE. Suite 110
NEW ORLEANS, LA. 70128

Sheet Title
DOOR & WINDOW DETAILS

Project Number 2715
Sheet Date September 14, 2007
Scale NOTED ON DRAWING
Drawn By RCF, JPP
Checked By HDS

Sheet Number
A402

Copyright © 2007 Sikes Group, Inc.
This copyright notice must appear on all reproductions of this work.