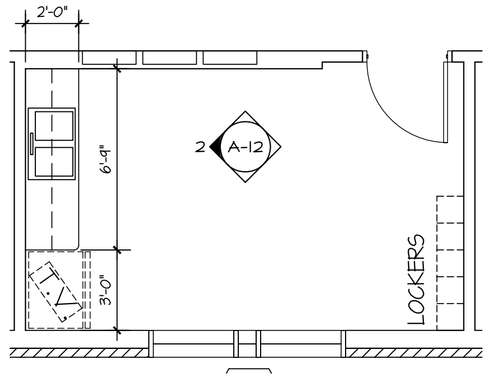

1 PLAN - LOUNGE
A-12 1/4" = 1'-0"

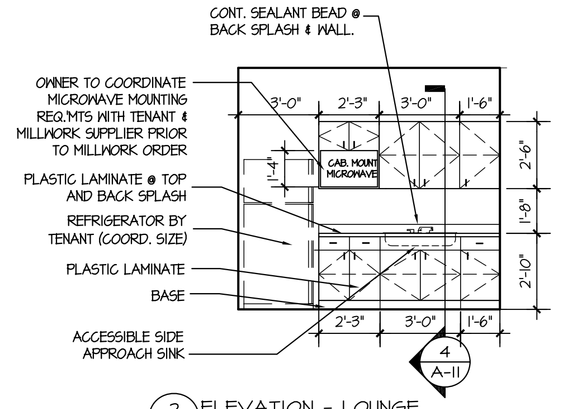

2 ELEVATION - LOUNGE
A-12 1/4" = 1'-0"

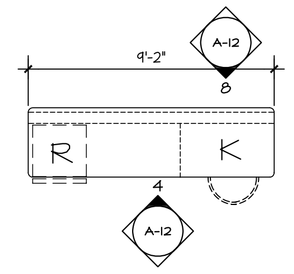

3 PLAN - NURSE & MED PREP
A-12 1/4" = 1'-0"

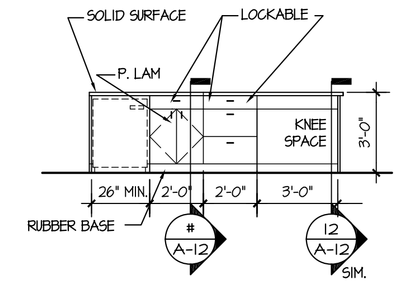

4 ELEVATION - NURSE & MED PREP
A-12 1/4" = 1'-0"

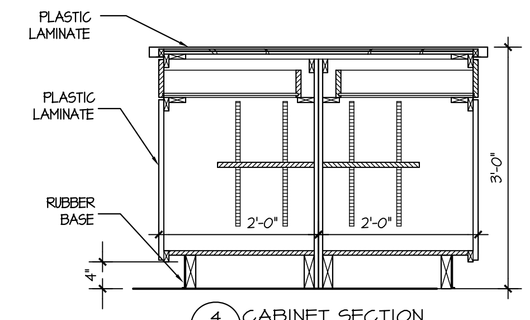

4 CABINET SECTION
A-12 3/4" = 1'-0"

NOTE:
PROVIDE 18"x24" ACCESS PANELS (FINISH TO MATCH WALL FINISH) W/STAINLESS STEEL SCREWS & PLASTIC SNAP CAP- WHITE @ ALL KNEE WALL LAVATORIES.

NOTE:
RADIUS COUNTERTOP CORNERS FOR ALL MILLWORK TYP. 2".

INTEGRAL CORNER GUARDS AT ALL CORNERS.

CONTRACTOR NOTE:
MILLWORK SHOP DRAWINGS MUST BE SUBMITTED TO ARCHITECT PRIOR TO MANUFACTURING, FOR DESIGN CONFORMANCE AND REVIEW.

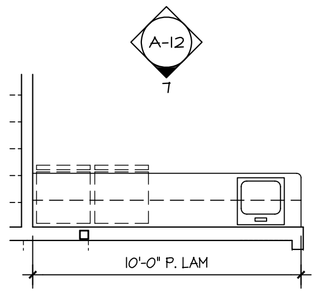

6 PLAN - LAB
A-12 1/4" = 1'-0"

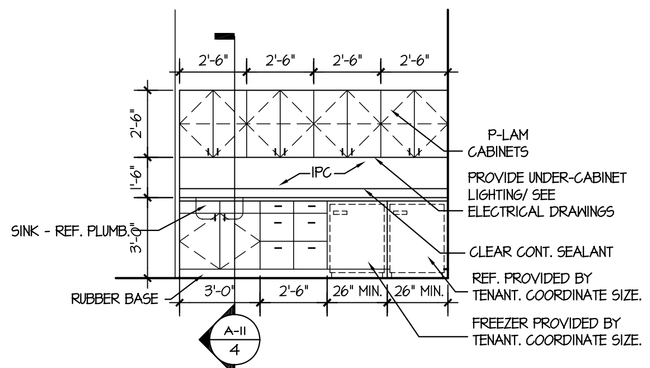

7 ELEVATION - LAB
A-12 1/4" = 1'-0"

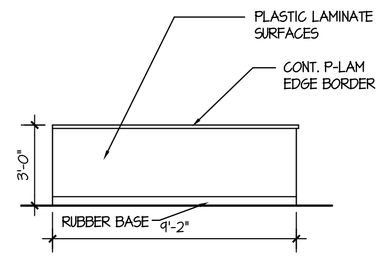

8 ELEVATION - NURSE & MED PREP
A-12 1/4" = 1'-0"

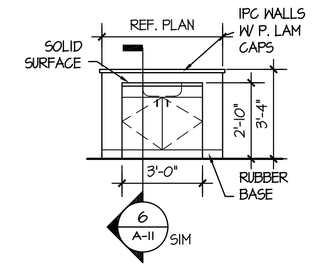

9 ELEVATION - SINK WITH CABINET
A-12 1/4" = 1'-0"

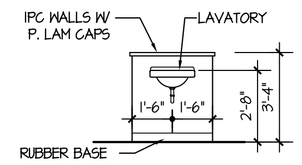

10 ELEVATION - LAVATORY
A-12 1/4" = 1'-0"

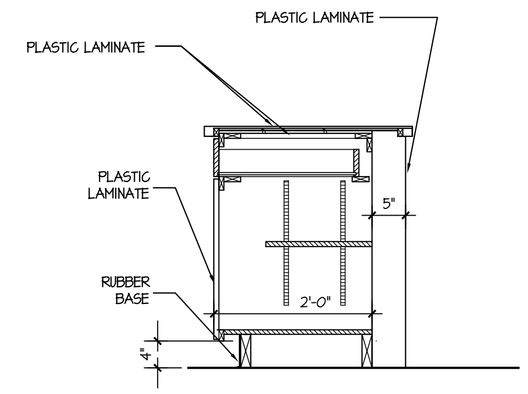

11 CABINET SECTION
A-12 3/4" = 1'-0"

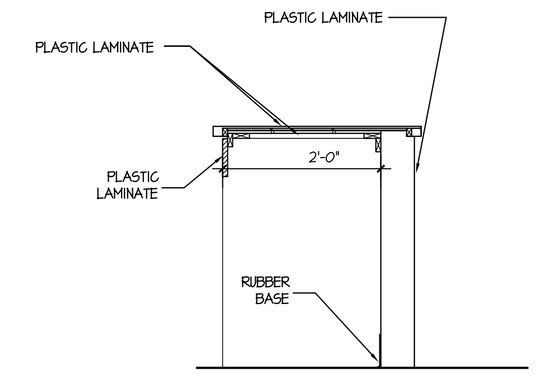

12 CABINET SECTION
A-12 3/4" = 1'-0"

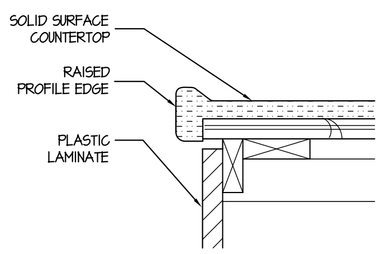

13 DETAIL - COUNTER EDGE
A-12 3" = 1'-0"

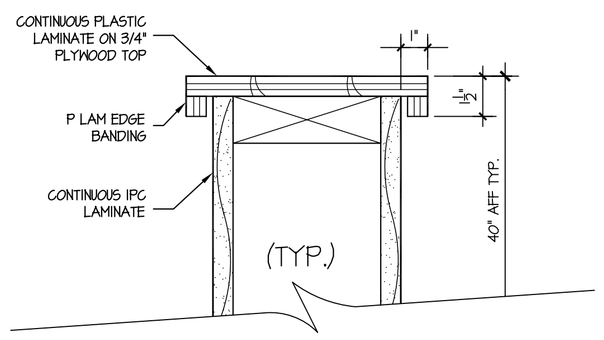

14 P.LAM CAP
A-12 3" = 1'-0"

NOTE: REFER TO THE ELECTRICAL DRAWINGS FOR MORE DATA ON THE ELEC., TV., AND AUDIO OUTLETS.

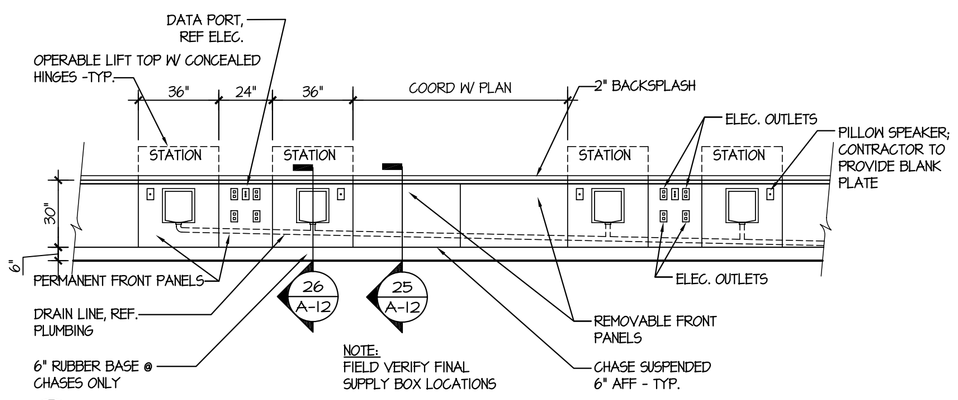

15 ELEVATION - HORIZONTIAL RO CHASE
A-12 1/4" = 1'-0"

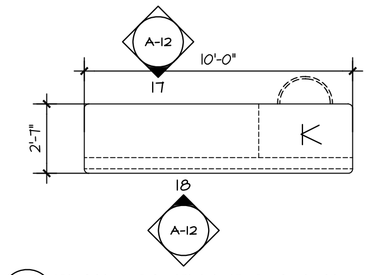

16 PLAN - SATELLITE STATION
A-12 1/4" = 1'-0"

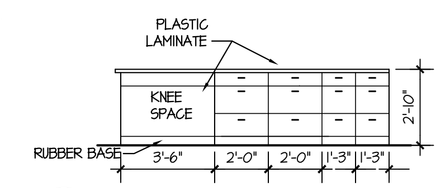

17 ELEVATION - SATELLITE STATION
A-12 1/4" = 1'-0"

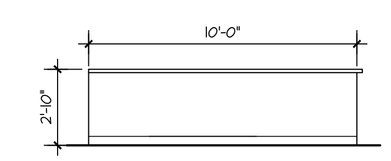

18 ELEVATION - SATELLITE STATION
A-12 1/4" = 1'-0"

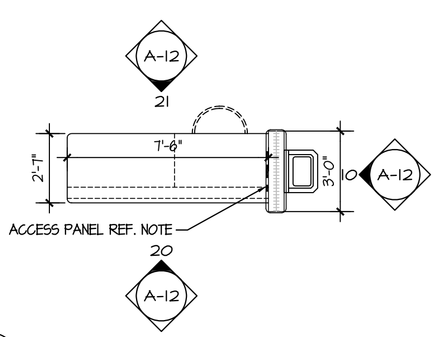

19 PLAN -SATELLITE STATION
A-12 1/4" = 1'-0"

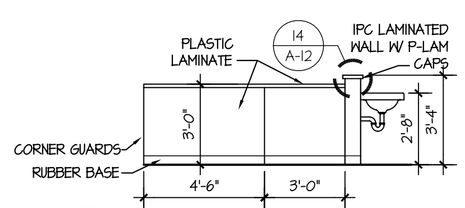

20 ELEVATION - SATELLITE STATION
A-12 1/4" = 1'-0"

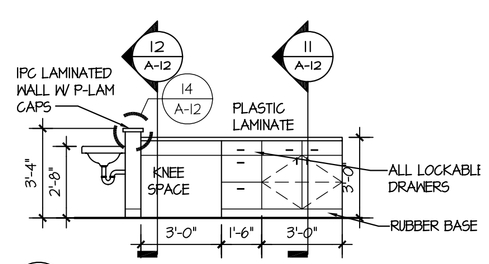

21 ELEVATIONI - SATELLITE STATION
A-12 1/4" = 1'-0"

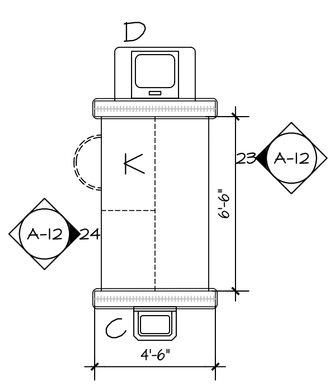

22 PLAN - SATELLITE STATION
A-12 1/4" = 1'-0"

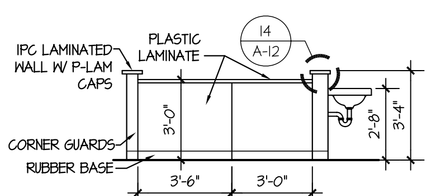

23 ELEVATION - SATELLITE STATION
A-12 1/4" = 1'-0"

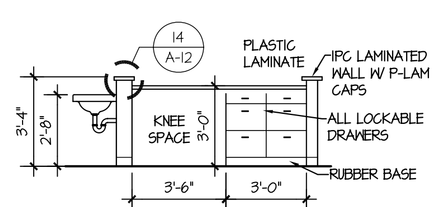

24 ELEVATION - SATELLITE STATION
A-12 1/4" = 1'-0"

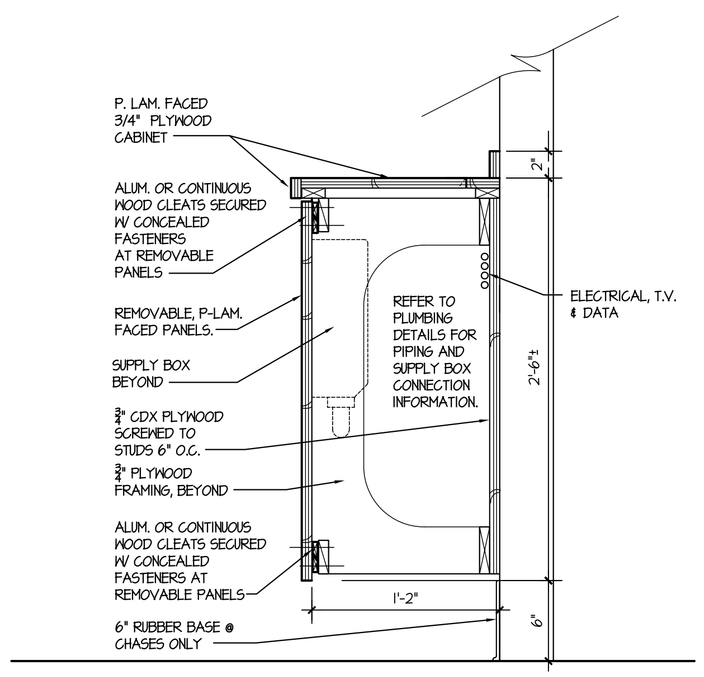

25 SECTION - HORIZONTAL CHASE
A-12 1 1/2" = 1'-0"

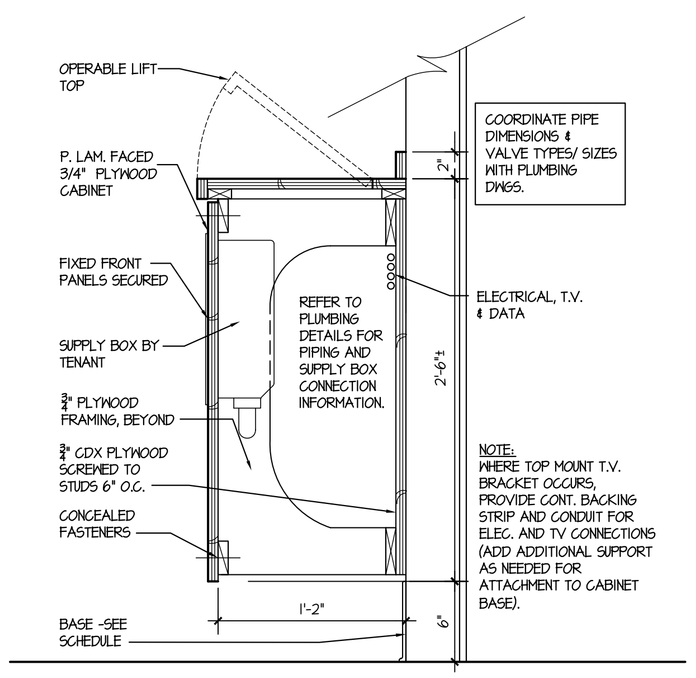

COORDINATE PIPE DIMENSIONS & VALVE TYPES/ SIZES WITH PLUMBING DWGS.

NOTE:
WHERE TOP MOUNT T.V. BRACKET OCCURS, PROVIDE CONT. BACKING STRIP AND CONDUIT FOR ELEC. AND TV CONNECTIONS (ADD ADDITIONAL SUPPORT AS NEEDED FOR ATTACHMENT TO CABINET BASE).

26 SECTION - HORIZONTAL CHASE
A-12 1 1/2" = 1'-0"

IMPORTANT
Contractor is to verify all dimensions and conditions before executing any work.

The scales as stated herein are valid on the original drawing. These scales are hereby changed by the ratio of the overall sheet dimensions of the print to corresponding dimensions of the original drawing.

The drawing is the property of ALEX ROUSH, INC. and is not to be copied or reproduced in whole or part. It is specifically identified herein and is not to be used on any other project. It is to be returned upon request.

Alex Roush Architects,Inc.
2255 CUMBERLAND PARKWAY
BUILDING 1000
ATLANTA, GEORGIA 30339
(770)333-7878
FAX 333-7902

ATHENS DIALYSIS CENTER
DAVITA, INC.
15953 ATHENS LIMESTONE DRIVE.
ATHENS, AL 35611

ADPH B-07-129
DRAWN BY: CLM
DATE: 09/14/07
PROJECT NO.0768
REVISIONS
REV.
REV.
REV.

Sheet No.
A-12

0768 1/9/2008 11:12 AM ROUSH17